ELECTROSTATIC FLOORING

Toro SC and Granit SD (Sheet and Tile)

Handling and Storage

1. Johnsonite flooring and adhesives must be site conditioned at room temperature for 48 hours prior to, during, and after installation. Room temperature must be maintained between 65° and 85°F (18° and 30°C) with HVAC system operating. A minimum temperature of 55°F (13°C) must be maintained afterwards. The ambient relative humidity should be between 40% and 60%.
2. In areas that are exposed to intense or direct sunlight, the product must be protected during the conditioning, installation, and adhesive curing periods, by covering the light source.
3. The highest quality of materials and workmanship is employed in the manufacture of Johnsonite Flooring and careful inspection is made before shipment. However, a quality installation is the responsibility of the installer. It is the installer's responsibility to verify the accuracy of the order and to ensure the materials are checked for damage, defects, and satisfactory color match. An authorized Johnsonite distributor or Johnsonite representative must be notified of any defects before installation proceeds.
4. Johnsonite cannot accept responsibility for any loss or damage that may result from the use of this information, due to processing or working conditions and/or workmanship outside our control. Users are advised to confirm the suitability of this product by their own tests.

General Subfloor Preparation

1. **All subfloors** must be clean, smooth, flat and dry. The surface must be free of all dust, loose particles, solvents, paint, grease, oil, wax, alkali, sealing/curing compounds, old adhesive, and any other foreign material, which could affect installation. **Caution: Do not use oil based sweeping compounds.** Fill all depressions, cracks, and other surface irregularities with a good quality Portland cement based underlayment patching compound.

   NOTE: Contamination on the substrate can cause damage to the resilient flooring material. Permanent and non-permanent markers, pens, crayons, paint, etc., must not be used to write on the back of the flooring material or used to mark the substrate as they could bleed through and stain the flooring material. If these contaminants are present on the substrate they must be mechanically removed prior to the installation of the flooring material.

   Caution: Do not use liquid solvents or adhesive removers.

   Johnsonite does not recommend installing over existing resilient floors. All existing flooring and adhesives must be removed prior to installing the new flooring material. Remove existing adhesive mechanically – do not use chemical adhesive removers or solvents.

   Caution: Some resilient flooring products and adhesives contain "asbestos fibers" and special handling of this material is required.

2. **Concrete subfloors** must be constructed as recommended by the American Concrete Institute's ACI 302.2 "Guide for Concrete Slabs that Receive Moisture-Sensitive Flooring Materials" and prepared to receive resilient flooring according to ASTM F 710 "Standard Practice for Preparing Concrete Floors to Receive Resilient Flooring".

   Do not install Johnsonite flooring over expansion joints.

   All concrete subfloors must be tested for moisture, pH (alkalinity), and proper adhesive bond:

   Moisture tests shall be conducted in accordance with ASTM F 1869 "Standard Test Method for Measuring Moisture Vapor Emission Rate of Concrete Subfloor Using Anhydrous Calcium Chloride" or ASTM F 2170 "Standard Test Method for Determining Relative Humidity in Concrete Floor Slabs using *in situ* Probes". Three tests should be conducted for areas up to 1,000 sq. ft. and one additional test should be conducted for each additional 1,000 sq. ft. of flooring.

   - Results must not exceed 5 lbs. per 1,000 sq. ft. in 24 hours when tested to ASTM F 1869, or exceed 80% when tested to ASTM F 2170
   - If the tests results exceed the limitations, the installation must not proceed until the problem has been corrected

   A pH test for alkalinity must be conducted. Results should range between 7 and 9. If the test results are not within the acceptable range of 7 to 9, the installation must not proceed until the problem has been corrected.

   An adhesive bond test should be performed using the actual flooring materials and adhesive to be installed. The test areas should be a minimum of 36" x 36" and remain in place for at least 72 hours and then evaluated for bond strength to the concrete.

3. **Wood subfloors** must have a minimum 18" (47 cm) of cross-ventilated space between the bottom of the joist and ground. Exposed earth crawl spaces should be sealed with a polyethylene moisture barrier.

   Subfloors should meet local and national building codes. Trade associations, such as the APA -"The Engineered Wood Association", offer structural guidelines for meeting various code requirements.

   Single Wood and Tongue and Groove subfloors should be covered with 1/4" (6.4 mm) or 1/2" (13 mm) APA approved underlayment plywood. Use 1/4" (6.4 mm) thick underlayment panels for boards with a face width of 3" (76 mm) or less. For boards wider than 3" (76 mm) face width use 1/2" (13 mm) underlayment panels.

   Countersink nail heads and fill depressions, joints, cracks, gouges, and chipped edges with a good quality Portland cement based patching compound.

   Do not install over OSB (Oriented Strand Board), particle board, chipboard, lauan or composite type underlayments.
4. **Terrazzo and Ceramic floor** surface must be thoroughly sanded to remove all glaze and waxes. Remove or replace all loose tiles and clean the grout lines. Use a Portland cement based leveling compound to fill all grout lines and other depressions.
5. **Steel floor** surface must be mechanically abraded to assist with the adhesive bond. The floor must be cleaned to remove all dirt, rust and other contaminants. When applying adhesive the non-porous installation instructions must be followed.
6. **Concrete floors equipped with a radiant heating system:** Turn the heat down to 65°F (18°C) for at least 48 hours before installation. Heat may be gradually returned to operating temperature 48 hours after installation. Temperature should not exceed 85°F (30°C).

Electrostatic Sheet Flooring Installation

1. **Recommended Adhesives:**
   - **a.** For standard application use Johnsonite 925 Resilient Flooring Adhesive in combination with Johnsonite 906 Conductive Adhesive:
     - **01.** Johnsonite 925 Resilient Flooring Adhesive **(906 Conductive Adhesive must be used on grounding strips)**.
       Trowel: porous substrate: 1/16" x 1/16" x 1/16" 'V' notch
       Trowel: non-porous substrate: 1/32" x 1/16" x 1/32" 'U' notch
     - **02.** Johnsonite 906 Conductive Adhesive:
       Must use in conjunction with all copper grounding strips.
       Trowel: Apply the 906 Conductive Adhesive on the copper grounding strips with the same size trowel used for the 925 Resilient Flooring Adhesive.
   - **b.** For application in areas subject to heavy point loads, rolling loads, topical moisture, or temperature extremes use Johnsonite 975 Two-Part Urethane Adhesive in combination with Johnsonite 906 Conductive Adhesive:
     - **01.** Johnsonite 975 Two-Part Urethane adhesive **(906 Conductive Adhesive must be used on grounding strips).**
       Trowel: porous and non-porous substrates: 1/32" x 1/16" x 1/32" 'U' notch
     - **02.** Johnsonite 906 Conductive Adhesive:
       Must use in conjunction with all copper grounding strips.
       Trowel: Apply the 906 Conductive Adhesive on the copper grounding strips with the same size trowel used for the 975 Two-Part Urethane Adhesive.
2. **Adhesive Application:** Follow adhesive label instructions for proper use.
3. **Sheet Installation:**
   - **a.** Install rolls in sequential order following roll numbers on the labels.
   - **b.** Reverse sheets.
   - **c.** Cut pieces to length allowing approximately 3" (76 mm) excess for trimming.
   - **d.** Cut the first piece to fit by freehand knife, direct scribing or pattern scribing method.
   - **e.** Remove 1/2" (13 mm) off the factory seam edge using an edge trimmer or straight edge and knife.
   - **f.** Position all remaining sheets so that the top sheet overlaps the previous sheet by 1/2" (13 mm). Trim 1/2" (13 mm) off opposite seam edge using an edge trimmer or straight edge and knife.
   - **g.** Fold back the sheets and install copper grounding strips as seen in Fig. 1. A copper grounding strip is placed across the width of the sheets approximately 8 inches from the wall. The copper grounding strips should extend up the wall to a known ground.
   - **h.** All end/head seams are must have a 2 foot section of copper grounding strip as seen in Fig. 1.

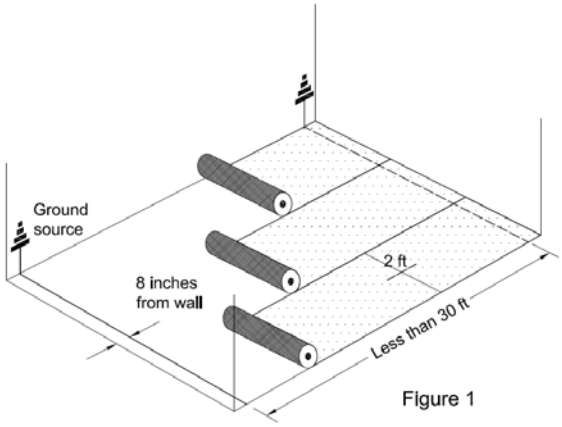

Figure 1

i. In rooms that exceed 60ft. in length – a copper grounding strip must be installed every 30 ft.
j. Apply a 3” (76 mm) band of 906 Conductive Adhesive over ALL copper grounding strips.
k. Apply the 925 or 975 adhesive (based on the adhesive selection) to the remainder of the substrate and allow proper open time.
l. Roll the flooring in both directions using a 100 pound three-section roller. Stay approximately 3" (76 mm) from the seams.
m. Vinyl sheet flooring must be welded using the Heat Weld or Cold Weld methods listed below.

4. Seams – All seams must be welded:

a. Heat Weld Seam:
01. Note: It is recommended to heat weld seams to provide a more sterile and a water tight seam.
02. Recess scribe the seam with a slight gap not to exceed 1/64” (0.4 mm) to help guide the router.
03. Insert a scrap piece of material under the scribe mark to protect the seam edge of the first piece.
04. Use a sharp knife to cut the seam following the scribe mark. Cut should be perpendicular, do not angle the knife blade.
05. Remove the scrap piece of material and seam trimmings then roll the seam with a small hand roller.
06. Roll the seam area with a 100 pound three-section roller.
07. Wait a minimum 24 hours after installation before heat welding the seams.
08. Rout approximately 2/3 of the thickness of the material.
09. Use Johnsonite vinyl weld rod.

b. Cold Weld Seam:
01. Recess scribe the seam to provide a net fit.
02. Insert a scrap piece of material under the scribe mark to protect the seam edge of the first piece.
03. Use a sharp knife to cut the seam following the scribe mark. Cut should be perpendicular, do not angle the knife blade.
04. Remove the scrap piece of material and seam trimmings then roll the seam with a small hand roller.
05. Roll the seam area with a 100 pound three-section roller.
06. Wait at least 2 to 3 hours after the flooring material has been installed before applying the Johnsonite Cold Weld Liquid.
07. Refer to the Cold Weld instructions for complete Cold Weld Liquid application details.

5. Traffic:
a. No traffic for 24 hours after installation.
b. No heavy traffic, rolling loads, or furniture placement for 72 hours after installation.

Electrostatic Tile Installation

1. Recommended Adhesives:
Johnsonite 906 Conductive Adhesive MUST be used
Trowel: **porous substrate only**: 1/16" x 1/16" x 1/16" 'V' notch

2. Adhesive Application: Follow adhesive label instructions for proper use.

3. Tile installation:
a. Batch numbers should not be mixed during the installation.
b. Square the room and establish reference points on the substrate.
c. A copper grounding strip is placed across the shorter width of the area approximately 8 inches (20.3 cm) from the wall. The copper grounding strips should extend up the wall to a known ground as seen in Fig. 2
d. Install copper grounding strips every 30 feet (9.1 m) with a minimum of at least 1 copper grounding strip. One grounding strip should be installed for every 500 square feet of tile
e. Apply the 906 Conductive Adhesive to the substrate.
f. Use established reference points and install the tile.
g. Lay tiles into the adhesive while it is still wet.
h. Lightly butt tiles together when placing the flooring into the adhesive. Do not force tiles together creating a ledge condition at the seams and corners. Sliding tiles will force the adhesive out between the seams. Work off of the flooring or use kneeling boards.

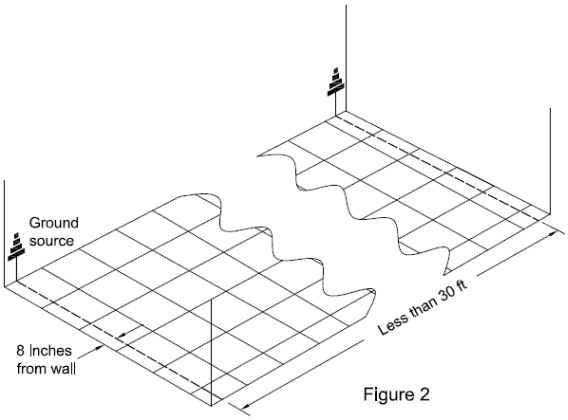

Figure 2

i. Periodically, lift the corner of an installed tile to ensure proper transfer of adhesive.
j. Immediately roll floor in both directions with a 100 pound three-section roller. Use a hand roller in areas that cannot be reached with a large roller.
k. Inspect the floor surface, especially seams, and remove any adhesive on the surface.

4. **Traffic**:
   a. No traffic for 24 hours after installation.
   b. No heavy traffic, rolling loads, or furniture placement for 72 hours after installation.

Adhesive Clean Up

Excess adhesive should be removed during the installation process.

925 Resilient Flooring Adhesive:

- Use a clean white cloth dampened with water to remove wet adhesive from floor covering and tools.
- Dried adhesive may require the use of denatured alcohol applied to a clean white cloth. (Follow manufacturer's precautions when using denatured alcohol.)

906 Conductive Adhesive:

- Use a clean white cloth dampened with water to remove wet adhesive from floor covering and tools.
- Dried adhesive may require the use of denatured alcohol applied to a clean white cloth. (Follow manufacturer's precautions when using denatured alcohol.)

975 Two-Part Urethane Adhesive

- Before the adhesive sets, remove excess adhesive from flooring and clean tools with denatured alcohol applied to a clean white cloth (Follow manufacturer's precautions when using denatured alcohol.)
- Do not allow adhesive to dry on the flooring surface.
- Removing dried adhesive may cause irreparable damage to the flooring surface.

Maintenance

1. Wait 72 hours after installation before performing initial cleaning.
2. A regular maintenance program must be started after the initial cleaning.
3. Refer to Johnsonite's Maintenance Instructions for complete details.
   Check Web Site (www.johnsonite.com) for current instructions.
   Contact Johnsonite at (800)-899-8916 with any questions.

Johnsonite A Tarkett Company | THE ULTIMATE FLOORING EXPERIENCE
Technical Services Department
16910 Munn Road, Chagrin Falls, Ohio 44023
(800) 899-8916 ext 9297 Fax (440) 632-5643
www. johnsonite.com
E-mail: info @ johnsonite.com
© 2010 Johnsonite, Inc